CMPE630: Digital Integrated Circuit Design
Laboratory Exercise 06

Introduction to Layout and Post-Extraction Simulation

Gloria Mbaka
Performed: 3/7/2025
Submitted: 3/21/2025

Lab Section 01
Instructor: Dr. Zuzak Micheal
TA: Bertola Thomas, and Evans John

By submitting this report, I attest that I neither have given nor have received any unauthorized assistance (including writing, collecting data, plotting figures, tables, or graphs, or using previous student reports as a reference), and I further acknowledge that giving or receiving such assistance will result in a failing grade for this course.

Your Signature: *CGM*

Table of Contents

Table of Contents 2

1. Abstract 3

2. Design Methodology 3

2.1 Project Part 1 3

2.2 Part 2 - Motivation 6

3. Results and Analysis 9

3.1 Transient Simulation Results 9

3.2 ADE XL Test Results 10

3.3 Design Rule Check (DRC) and Layout Versus Schematic (LVS) 16

3.5 Summary of Simulation Results 17

3.7 Layout Dimensions 20

4. Conclusion 20

5. Signoff Sheet 20

1. Abstract

This lab focused on designing and simulating a 1-bit CMOS Mirror Adder using Cadence Virtuoso. The schematic was sized for equal pull-up and pull-down strengths, and performance was evaluated through extensive pre- and post-layout simulations using ADE XL. Part 2 included layout creation under vertical space constraints, utilizing folding transistor techniques and stick diagrams. Key performance metrics such as rise time, fall time, and propagation delay were extracted under various loading conditions. The final layout passed DRC, LVS, and RCX checks and demonstrated the effects of parasitics on the Mirror Adder performance.

2. Design Methodology

2.1 Project Part 1

Transistor sizing balances rise and fall times by accounting for the mobility difference between NMOS and PMOS. Since NMOS has higher mobility, PMOS devices are sized roughly 2× wider to match drive strength. In 45nm technology, minimum sizes are 120nm for NMOS and 240nm for PMOS. For stacked transistors (e.g., in mirror adders), widths are increased to compensate for added resistance. Wide devices are often "folded" into smaller parallel transistors to fit layout height constraints. Proper sizing improves speed but increases power and area, so trade-offs must be managed. Figure 1 is schematics of the mirror adder while Figure 2 illustrates the folding of the transistor and figure 2 is shows the stick diagram.

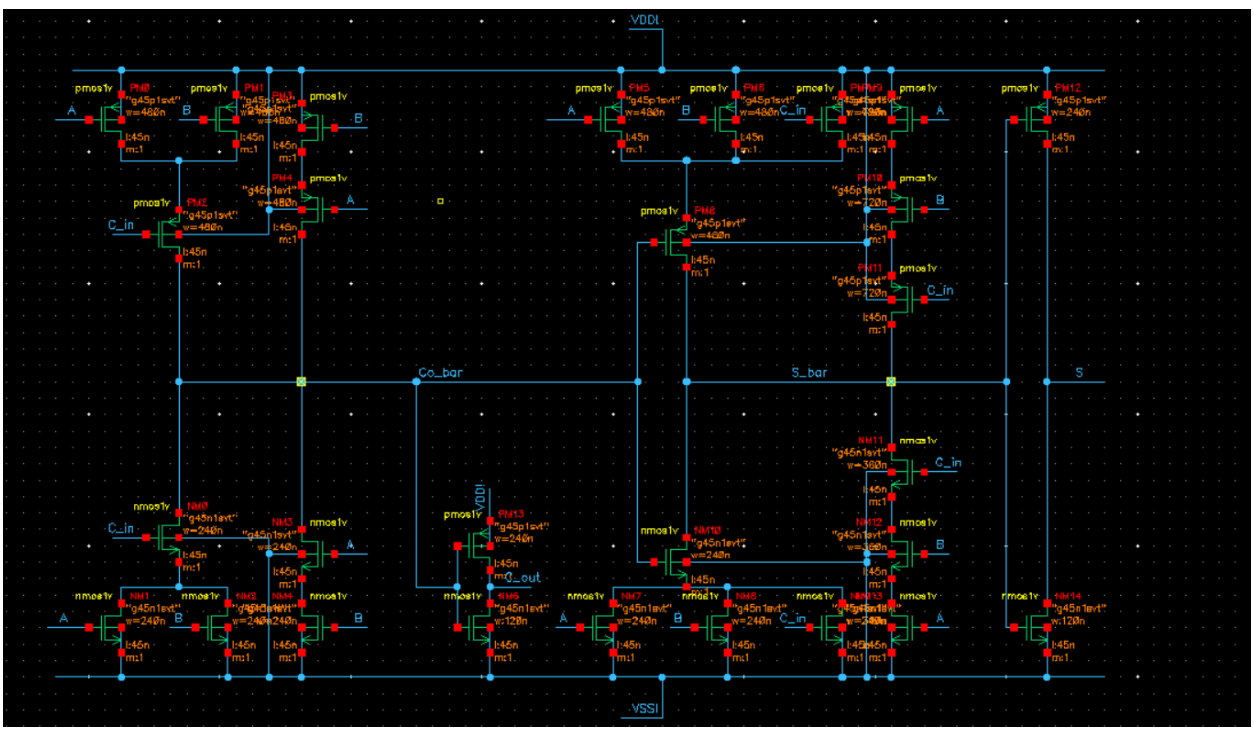

Figure 1: Mirror Adder Schematics Diagram with Sizing

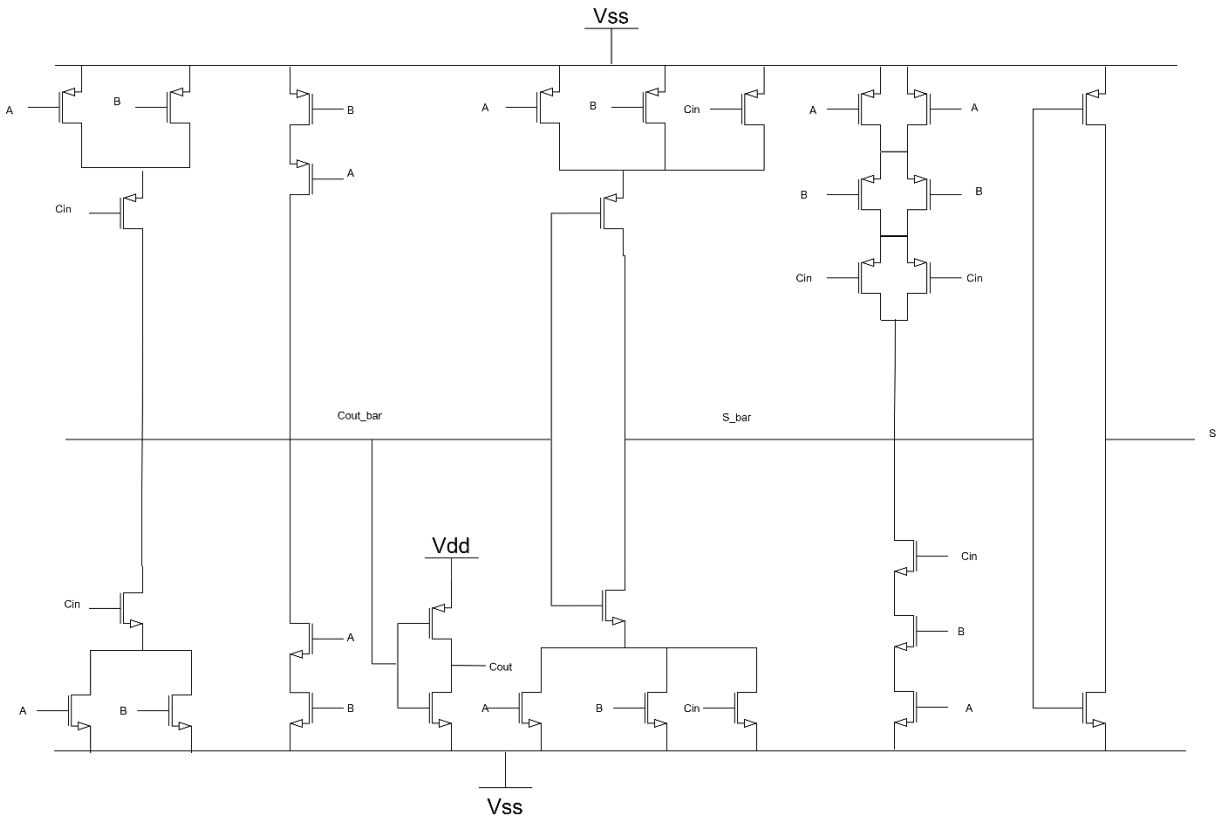

Figure 2: Schematic Diagram OF An Adder Illustrating the folding of Transistors.

The motivation behind the Part 1 design was to establish a logically correct and well-sized schematic of the mirror adder as the foundation for the full-custom design flow. This phase was critical for verifying both the functionality and performance of the circuit before moving to layout. Drawing the schematic in Cadence Virtuoso allowed us to implement the mirror adder using proper transistor sizing, based on the minimum feature sizes for the 45 nm process node—ensuring equal drive strength between NMOS and PMOS devices. After schematic entry, the design was checked in the CIW (Command Interpreter Window) to confirm there were no connectivity or parameter errors. A testbench was then created, and pre-layout simulations were performed using all eight input combinations from the mirror adder truth table to verify the correct logic behavior of the Sum and Cout outputs. This step was essential in confirming that the mirror adder was correctly implemented and timing-accurate under ideal, pre-extracted conditions.

The mirror adder is a type of 1-bit full adder used to compute the binary addition of three inputs: A, B, and Cin (carry-in). It produces two outputs—Sum and Cout (carry-out)—based on fundamental Boolean operations. The Sum output of the mirror adder is derived from the exclusive-OR of the three input bits. This can be expressed using the following Boolean equation:

$$Sum = A \oplus B \oplus Cin$$

The Cout, or carry-out output, is determined by the majority function of the inputs A, B, and Cin. In Boolean form, this is written as:

$$Cout = AB + ACin + BCin$$

To understand the behavior of the mirror adder, its logic function is best described by the complete truth table shown below:

Table 1: Truth Table of an Adder

A	B	Cin	S	Cout
0	0	0	0	0
0	0	1	1	0
0	1	0	1	0
0	1	1	0	1
1	0	0	1	0
1	0	1	0	1
1	1	0	0	1
1	1	1	1	1

The mirror adder is particularly valued for its symmetrical structure, which helps to balance the delay of the pull-up and pull-down paths, resulting in reduced skew between rise and fall times. This balanced behavior makes it a strong candidate for high-speed digital arithmetic operations. Furthermore, the mirror adder's topology allows for efficient sharing of internal nodes, which reduces the number of required transistors, saving area and improving layout regularity. As such, the mirror adder is widely used in arithmetic logic units and other performance-sensitive digital systems.

In this project, delay minimization was addressed primarily through careful transistor sizing. NMOS and PMOS transistors were sized based on the unit inverter specifications for the 45 nm process, using 120 nm widths for NMOS and 240 nm for PMOS to ensure equal drive strength. For stacked transistors in the pull-up and pull-down networks, widths were scaled proportionally to reduce resistance and maintain balanced rise and fall delays. This helped minimize the overall propagation delay of the mirror adder across different input transitions. To further reduce delay, wider transistors were used in critical paths, especially where series connections increased resistance. However, this approach introduced limitations. Larger transistors led to increased gate and diffusion capacitances, which added load to the circuit and affected upstream performance. Additionally, in the layout phase, extremely wide transistors could not fit within the vertical constraints and had to be folded. The layout was tested with the testbench schematic. Figure 4 is the testbench schematic used in the layout simulations.

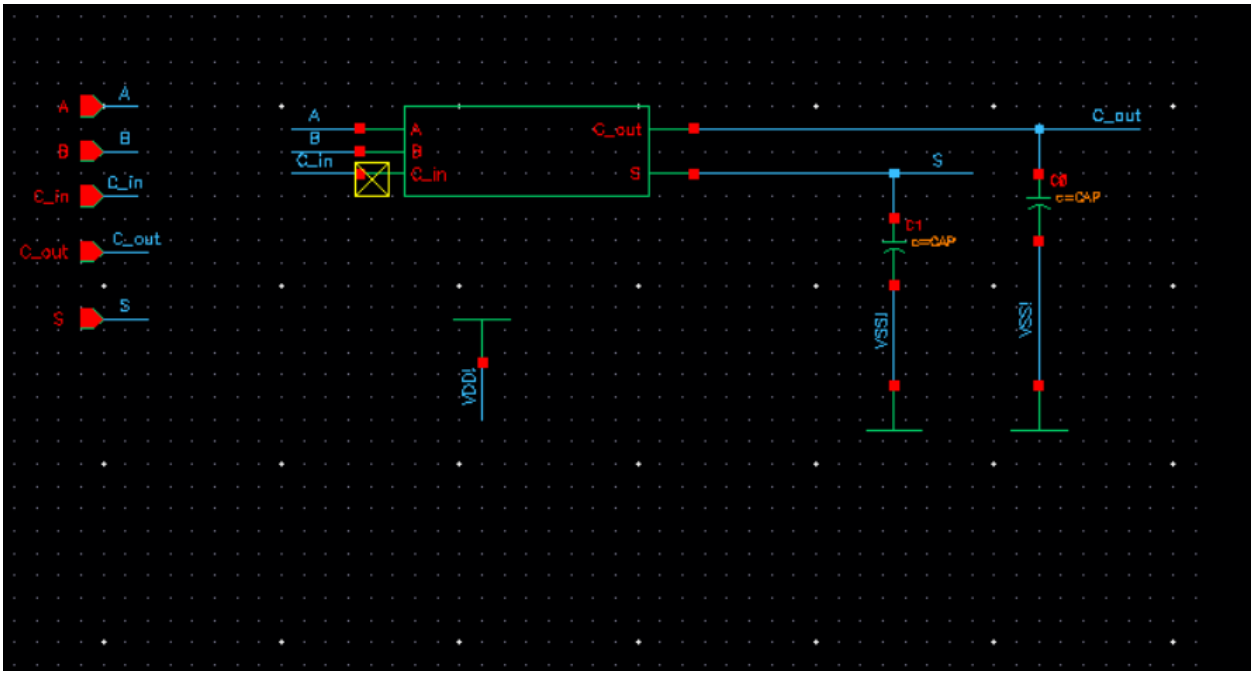

Figure 3 Testbench Schematics

2.2 Part 2 - Motivation

The goal of Part 2 was to transform the verified mirror adder schematic into a physically realizable layout that adhered to all fabrication constraints and passed the required DRC, LVS, and RCX checks. This phase was important because it introduced practical design challenges such as managing layout area, minimizing parasitic effects, and ensuring design rule compliance. One key constraint was the vertical height limit, which required the use of folded transistors for the wide PMOS devices. Folding allowed the large transistors to be implemented within the layout boundaries while maintaining the required drive strength. A detailed stick diagram **and** Euler path analysis were used to plan efficient routing and diffusion sharing. After layout creation, post-layout simulations were conducted to evaluate the performance impact of parasitics. This phase was essential in transitioning the design from schematic to fabrication-ready form and reinforced critical concepts like layout planning, parasitic extraction, and delay analysis in real-world VLSI workflows.

To facilitate an efficient layout of the mirror adder, Euler's path methodology was applied to both the Pull-Up Network (PUN) and Pull-Down Network (PDN). This technique enables the identification of a continuous path through transistors that allows for shared diffusion regions, thereby minimizing area and simplifying routing. To make the path construction clearer and more manageable, the circuit was partitioned into logical sections, each highlighted with a different color (as shown in Figure 4). This partitioning provided a structured approach to trace source-to-drain connectivity within each block and determine valid Euler paths for both networks. Based on the identified Euler paths (Figure 5), a clean and optimized stick diagram was drawn.

The stick diagram in Figure 6 illustrates the result of applying Euler path planning. The use of color in the stick diagram distinguishes between different layers such as poly, diffusion, and metal, and highlights where folding was applied to wide PMOS transistors.

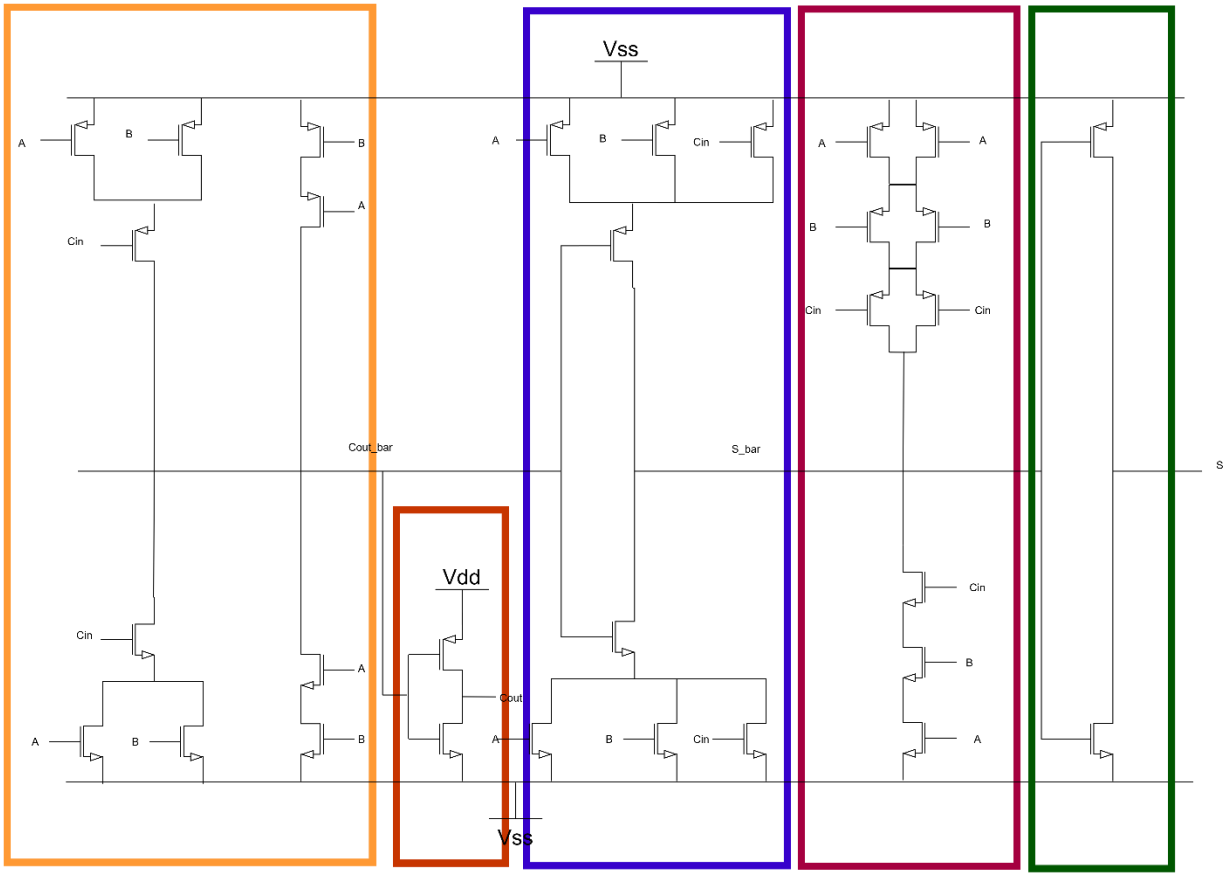

Figure 4: Partitioned Mirror Adder Schematic for Euler Path Identification

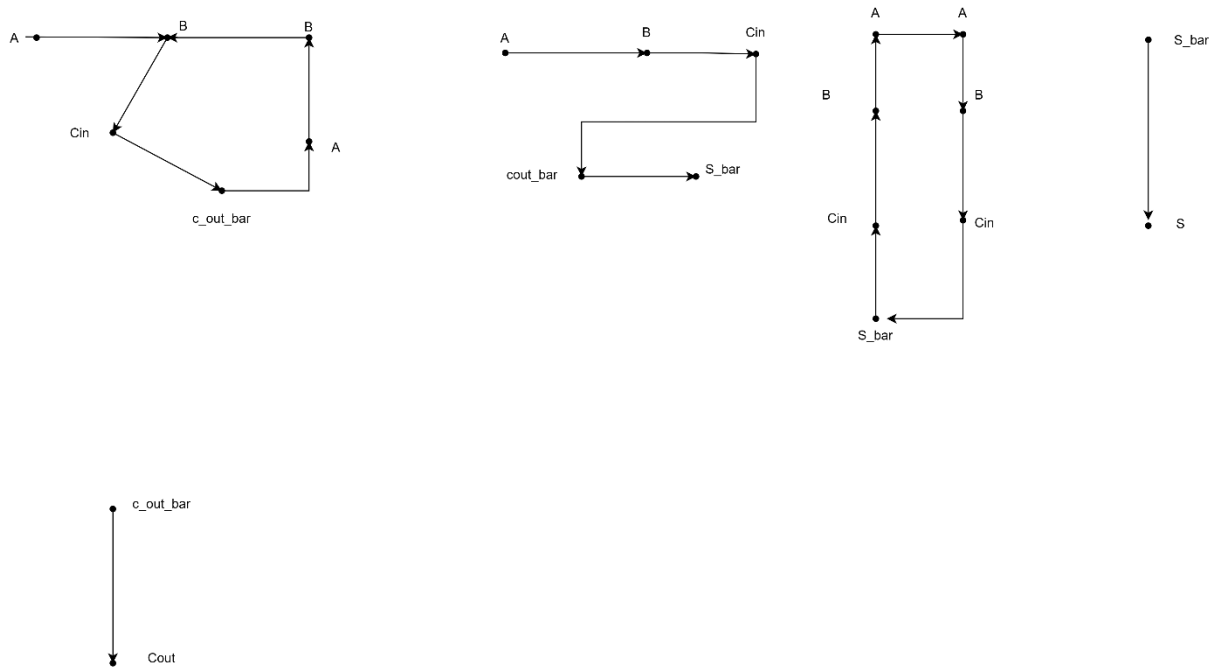

Figure 5: Euler path

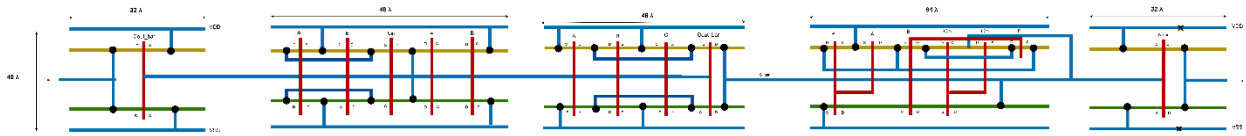

Figure 6: Stick Diagram of Mirror Adder

Transistor folding is a layout technique used to split a wide transistor into multiple narrower transistors connected in parallel. This method is commonly employed in full-custom VLSI design when a transistor's required width exceeds the allowable layout height or violates design rules related to diffusion spacing and routing constraints. Instead of implementing a single wide device, folding maintains the same effective width by using multiple smaller transistors placed side-by-side, sharing source and drain diffusion regions. In the mirror adder layout, transistor folding was essential due to height constraints imposed by the design area and the use of minimum metal routing. Specifically, several PMOS transistors required widths of 720 nm, which could not be accommodated vertically within the given layout space. These transistors were folded into two segments of 360 nm each, preserving the total drive strength while allowing compliance with design rules. Folding also facilitated more efficient diffusion sharing and routing, resulting in a compact and DRC-clean layout without sacrificing electrical performance.

The theoretical approach to minimizing delays focused on translating the optimized schematic into an efficient physical layout while preserving electrical performance. Delay was minimized by carefully arranging transistors to reduce resistance and capacitance in critical paths. Folding was used to implement large-width PMOS transistors within the layout's vertical constraints, allowing the desired drive strength to be maintained without violating design rules. Euler paths and stick

diagram planning enabled shared diffusion regions and minimized unnecessary routing, which helped reduce parasitic capacitance and improve timing. However, certain limitations arose during layout. Folding introduced complex connectivity, including the need for multiple contacts and interconnects, which increased parasitic capacitance. Additionally, tight layout constraints made it difficult to keep routing short and direct, leading to minor delays caused by increased wire length and overlap. Despite these challenges, the layout (Figure 7) maintained a good balance between area efficiency and delay performance, as confirmed through post-layout simulation.

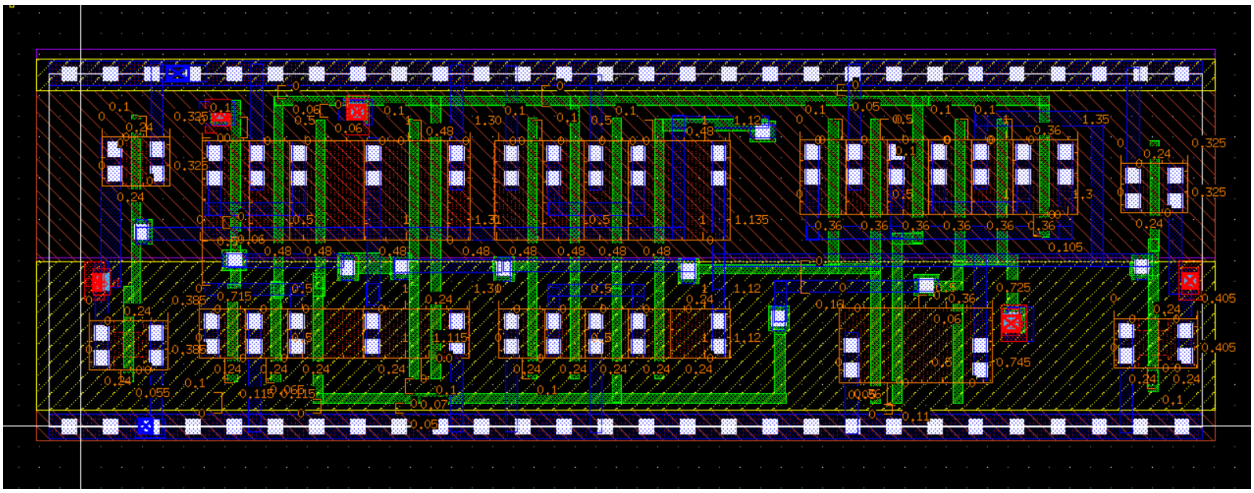

Figure 7: Final Layout

3. Results and Analysis

3.1 Transient Simulation Results

To validate the functional behavior of the mirror adder, transient simulations were performed using Cadence ADE XL. The testbench applied all eight combinations of inputs A, B, and Cin, and monitored the Sum and Carry-out outputs under both unloaded and loaded conditions. Figure 8 shows the pre-layout transient waveform of the mirror adder, confirming correct logical operation across all input transitions. After RC extraction, the post-layout simulation was performed using the extracted view, and the waveform in Figure 9 reflects the same logic behavior with slightly degraded signal edges due to parasitics.

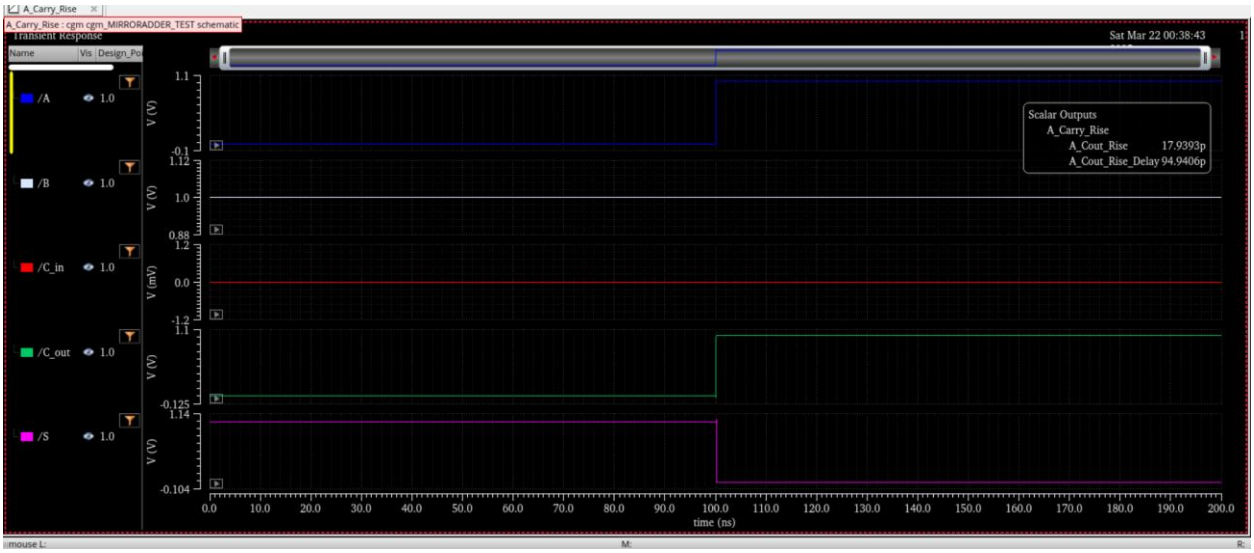

Figure 8: Pre-Layout Transient Simulation Waveform of Mirror Adder

Figure 9: Post-Layout Transient Simulation Waveform of Mirror Adder

3.2 ADE XL Test Results

Pre-extraction and post-extraction simulation results were captured using ADE XL's output summary tools. These results included rise time, fall time, and propagation delays for both Sum and Cout outputs. Figure 10 displays the pre-layout results summary, while Figure 11 presents the post-layout timing data, both obtained under worst-case test conditions with and without capacitive loading.

Outputs Setup | Results

Detail | Replace

Test	Output	Nominal	Spec
A_Carry_Rise	/A		
A_Carry_Rise	/B		
A_Carry_Rise	/C_in		
A_Carry_Rise	/C_out		
A_Carry_Rise	/S		
A_Carry_Rise	A_Cout_Rise	17.94p	
A_Carry_Rise	A_Cout_Rise_Del...	94.94p	
A_Carry_Rise_Load	/A		
A_Carry_Rise_Load	/B		
A_Carry_Rise_Load	/C_in		
A_Carry_Rise_Load	/C_out		
A_Carry_Rise_Load	/S		
A_Carry_Rise_Load	A_Cout_Rise_Load	2.787n	
A_Carry_Rise_Load	A_Cout_Rise_Del...	1.456n	
B_Carry_Rise	/A		
B_Carry_Rise	/B		
B_Carry_Rise	/C_in		
B_Carry_Rise	/C_out		
B_Carry_Rise	/S		
B_Carry_Rise	B_Cout_Rise	18.07p	
B_Carry_Rise	B_Cout_Rise_Del...	96.63p	
B_Carry_Rise_Load	/A		
B_Carry_Rise_Load	/B		
B_Carry_Rise_Load	/C_in		
B_Carry_Rise_Load	/C_out		
B_Carry_Rise_Load	/S		
B_Carry_Rise_Load	B_Cout_Rise_Load	2.777n	
B_Carry_Rise_Load	B_Cout_Rise_Del...	1.456n	
Cin_Carry_Rise1	/A		

cgm_MIRRORADDER | adexl

Parasitic Mode

Outputs Setup | Results

Detail | Replace

Test	Output	Nominal	Spec
B_Carry_Rise_Load	B_Cout_Rise_Load	2.777n	
B_Carry_Rise_Load	B_Cout_Rise_Del...	1.456n	
Cin_Carry_Rise1	/A		
Cin_Carry_Rise1	/B		
Cin_Carry_Rise1	/C_in		
Cin_Carry_Rise1	/C_out		
Cin_Carry_Rise1	/S		
Cin_Carry_Rise1	Cin_Cout_Rise	18.81p	
Cin_Carry_Rise1	Cin_Cout_Rise_...	75.23p	
Cin_Carry_Rise1_Load	/A		
Cin_Carry_Rise1_Load	/B		
Cin_Carry_Rise1_Load	/C_in		
Cin_Carry_Rise1_Load	/C_out		
Cin_Carry_Rise1_Load	/S		
Cin_Carry_Rise1_Load	Cin_Cout_Rise1_...	2.775n	
Cin_Carry_Rise1_Load	Cin_Cout_Rise1_...	1.436n	
Cin_Carry_Rise2	/A		
Cin_Carry_Rise2	/B		
Cin_Carry_Rise2	/C_in		
Cin_Carry_Rise2	/C_out		
Cin_Carry_Rise2	/S		
Cin_Carry_Rise2	Cin_Cout_Rise2	17.44p	
Cin_Carry_Rise2	Cin_Cout_Rise_...	87.06p	
Cin_Carry_Rise2_Load	/A		
Cin_Carry_Rise2_Load	/B		
Cin_Carry_Rise2_Load	/C_in		
Cin_Carry_Rise2_Load	/C_out		
Cin_Carry_Rise2_Load	/S		
Cin_Carry_Rise2_Load	Cin_Cout_Rise2_...	2.779n	

cgm_MIRRORADDER | adexl

Outputs Setup | Results

Detail | Replace

Test	Output	Nominal	Spec
Cin_Carry_Rise2_Load	/B		
Cin_Carry_Rise2_Load	/C_in		
Cin_Carry_Rise2_Load	/C_out		
Cin_Carry_Rise2_Load	/S		
Cin_Carry_Rise2_Load	Cin_Cout_Rise2_...	2.779n	
Cin_Carry_Rise2_Load	Cin_Cout_Rise2_...	1.446n	
A_Carry_Fall	/A		
A_Carry_Fall	/B		
A_Carry_Fall	/C_in		
A_Carry_Fall	/C_out		
A_Carry_Fall	/S		
A_Carry_Fall	A_Cout_Fall	16.26p	
A_Carry_Fall	A_Cout_Fall_Delay	74.17p	
A_Carry_Fall_Load	/A		
A_Carry_Fall_Load	/B		
A_Carry_Fall_Load	/C_in		
A_Carry_Fall_Load	/C_out		
A_Carry_Fall_Load	/S		
A_Carry_Fall_Load	A_Cout_Fall_Load	3.878n	
A_Carry_Fall_Load	A_Cout_Fall_Del...	2n	
B_Carry_Fall	/A		
B_Carry_Fall	/B		
B_Carry_Fall	/C_in		
B_Carry_Fall	/C_out		
B_Carry_Fall	/S		
B_Carry_Fall	B_Cout_Fall	16.1p	
B_Carry_Fall	B_Cout_Fall_Delay	80.07p	
B_Carry_Fall_Load	/A		
B_Carry_Fall_Load	/B		

Interactive.32

cgm_MIRRORADDER | adexl

Outputs Setup | Results

Detail | Replace

Test	Output	Nominal	Spec
B_Carry_Fall_Load	/A		
B_Carry_Fall_Load	/B		
B_Carry_Fall_Load	/C_in		
B_Carry_Fall_Load	/C_out		
B_Carry_Fall_Load	/S		
B_Carry_Fall_Load	B_Cout_Fall_Load	16.1p	
B_Carry_Fall_Load	B_Cout_Fall_Del...	80.07p	
Cin_Carry_Fall1	/A		
Cin_Carry_Fall1	/B		
Cin_Carry_Fall1	/C_in		
Cin_Carry_Fall1	/C_out		
Cin_Carry_Fall1	/S		
Cin_Carry_Fall1	Cin_Cout_Fall1	21.01p	
Cin_Carry_Fall1	Cin_Cout_Fall1_...	70.3p	
Cin_Carry_Fall1_Load	/A		
Cin_Carry_Fall1_Load	/B		
Cin_Carry_Fall1_Load	/C_in		
Cin_Carry_Fall1_Load	/C_out		
Cin_Carry_Fall1_Load	/S		
Cin_Carry_Fall1_Load	CIn_Cout_Fall1_...	3.883n	
Cin_Carry_Fall1_Load	Cin_Cout_Fall1_...	2.004n	
Cin_Carry_Fall2	/A		
Cin_Carry_Fall2	/B		
Cin_Carry_Fall2	/C_in		
Cin_Carry_Fall2	/C_out		
Cin_Carry_Fall2	/S		
Cin_Carry_Fall2	Cin_Cout_Fall2	16.04p	
Cin_Carry_Fall2	Cin_Cout_Fall2_...	71.05p	
Cin_Carry_Fall2_Load	/A		

cgm_MIRRORADDER | adexl

Outputs Setup | Results

Detail | Replace

Test	Output	Nominal	Spec
Cin_Carry_Fall2	Cin_Cout_Fall2_...	71.05p	
Cin_Carry_Fall2_Load	/A		
Cin_Carry_Fall2_Load	/B		
Cin_Carry_Fall2_Load	/C_in		
Cin_Carry_Fall2_Load	/C_out		
Cin_Carry_Fall2_Load	/S		
Cin_Carry_Fall2_Load	CIn_Cout_Fall2_...	3.873n	
Cin_Carry_Fall2_Load	Cin_Cout_Fall2_...	1.997n	
A_Sum_Rise	/A		
A_Sum_Rise	/B		
A_Sum_Rise	/C_in		
A_Sum_Rise	/C_out		
A_Sum_Rise	/S		
A_Sum_Rise	A_S_Rise	19.63p	
A_Sum_Rise	A_S_Rise_Delay	119.3p	
A_Sum_Rise_Load	/A		
A_Sum_Rise_Load	/B		
A_Sum_Rise_Load	/C_in		
A_Sum_Rise_Load	/C_out		
A_Sum_Rise_Load	/S		
A_Sum_Rise_Load	A_S_Rise_Load	2.781n	
A_Sum_Rise_Load	A_S_Rise_Delay_...	1.478n	
B_Sum_Rise	/A		
B_Sum_Rise	/B		
B_Sum_Rise	/C_in		
B_Sum_Rise	/C_out		
B_Sum_Rise	/S		
B_Sum_Rise	B_S_Rise	19.06p	
B_Sum_Rise	B_S_Rise_Delay	125p	
B_Sum_Rise_Load	/A		

cgm_MIRRORADDER | adexl

Outputs Setup | Results

Detail | Replace

Test	Output	Nominal	Spec
B_Sum_Rise_Load	/B		
B_Sum_Rise_Load	/C_in		
B_Sum_Rise_Load	/C_out		
B_Sum_Rise_Load	/S		
B_Sum_Rise_Load	B_S_Rise	2.771n	
B_Sum_Rise_Load	B_S_Rise_Delay	1.483n	
Cin_Sum_Rise1	/A		
Cin_Sum_Rise1	/B		
Cin_Sum_Rise1	/C_in		
Cin_Sum_Rise1	/C_out		
Cin_Sum_Rise1	/S		
Cin_Sum_Rise1	Cin_S_Rise1	17.62p	
Cin_Sum_Rise1	CIn_S_Rise1_Del...	134.4p	
Cin_Sum_Rise1_Load	/A		
Cin_Sum_Rise1_Load	/B		
Cin_Sum_Rise1_Load	/C_in		
Cin_Sum_Rise1_Load	/C_out		
Cin_Sum_Rise1_Load	/S		
Cin_Sum_Rise1_Load	Cin_S_Rise1_Load	2.777n	
Cin_Sum_Rise1_Load	CIn_S_Rise1_Del...	1.488n	
Cin_Sum_Rise2	/A		
Cin_Sum_Rise2	/B		
Cin_Sum_Rise2	/C_in		
Cin_Sum_Rise2	/C_out		
Cin_Sum_Rise2	/S		
Cin_Sum_Rise2	Cin_S_Rise1	17.77p	
Cin_Sum_Rise2	CIn_S_Rise1_Del...	96.92p	
Cin_Sum_Rise2_Load	/A		
Cin_Sum_Rise2_Load	/B		
Cin_Sum_Rise2_Load	/C_in		

Outputs Setup | Results

Detail

Test	Output	Nominal	S
Cin_Sum_Rise2_Load	/A		
Cin_Sum_Rise2_Load	/B		
Cin_Sum_Rise2_Load	/C_in		
Cin_Sum_Rise2_Load	/C_out		
Cin_Sum_Rise2_Load	/S		
Cin_Sum_Rise2_Load	Cin_S_Rise2_Load	2.76n	
Cin_Sum_Rise2_Load	CIn_S_Rise2_Del...	1.452n	
A_Sum_Fall	/A		
A_Sum_Fall	/B		
A_Sum_Fall	/C_in		
A_Sum_Fall	/C_out		
A_Sum_Fall	/S		
A_Sum_Fall	A_S_Fall	25.24p	
A_Sum_Fall	A_S_Fall_Delay	142.8p	
A_Sum_Fall_Load	/A		
A_Sum_Fall_Load	/B		
A_Sum_Fall_Load	/C_in		
A_Sum_Fall_Load	/C_out		
A_Sum_Fall_Load	/S		
A_Sum_Fall_Load	A_S_Fall_Load	3.88n	
A_Sum_Fall_Load	A_S_Fall_Delay_L...	2.077n	
B_Sum_Fall	/A		
B_Sum_Fall	/B		
B_Sum_Fall	/C_in		
B_Sum_Fall	/C_out		
B_Sum_Fall	/S		
B_Sum_Fall	B_S_Fall	23.35p	
B_Sum_Fall	B_S_Fall_Delay	143.9p	
B_Sum_Fall_Load	/A		

Outputs Setup | Results

Detail | Replace

Test	Output	Nominal	Spec
B_Sum_Fall_Load	/C_in		
B_Sum_Fall_Load	/C_out		
B_Sum_Fall_Load	/S		
B_Sum_Fall_Load	B_S_Fall_Load	3.888n	
B_Sum_Fall_Load	B_S_Fall_Delay_...	2.076n	
Cin_Sum_Fall1	/A		
Cin_Sum_Fall1	/B		
Cin_Sum_Fall1	/C_in		
Cin_Sum_Fall1	/C_out		
Cin_Sum_Fall1	/S		
Cin_Sum_Fall1	Cin_S_Fall1	16.52p	
Cin_Sum_Fall1	Cin_S_Fall1_Delay	124.8p	
Cin_Sum_Fall1_Load	/A		
Cin_Sum_Fall1_Load	/B		
Cin_Sum_Fall1_Load	/C_in		
Cin_Sum_Fall1_Load	/C_out		
Cin_Sum_Fall1_Load	/S		
Cin_Sum_Fall1_Load	Cin_S_Fall1_Load	3.885n	
Cin_Sum_Fall1_Load	Cin_S_Fall1_Dela...	2.043n	
Cin_Sum_Fall2	/A		
Cin_Sum_Fall2	/B		
Cin_Sum_Fall2	/C_in		
Cin_Sum_Fall2	/C_out		
Cin_Sum_Fall2	/S		
Cin_Sum_Fall2	Cin_S_Fall2	19.82p	
Cin_Sum_Fall2	Cin_S_Fall2_Delay	81.24p	
Cin_Sum_Fall2_Load	/A		
Cin_Sum_Fall2_Load	/B		
Cin_Sum_Fall2_Load	/C_in		

Outputs Setup | Results

Detail | Replace

Test	Output	Nominal	Spec
B_Sum_Fall_Load	/C_in		
B_Sum_Fall_Load	/C_out		
B_Sum_Fall_Load	/S		
B_Sum_Fall_Load	B_S_Fall_Load	3.888n	
B_Sum_Fall_Load	B_S_Fall_Delay_...	2.076n	
Cin_Sum_Fall1	/A		
Cin_Sum_Fall1	/B		
Cin_Sum_Fall1	/C_in		
Cin_Sum_Fall1	/C_out		
Cin_Sum_Fall1	/S		
Cin_Sum_Fall1	Cin_S_Fall1	16.52p	
Cin_Sum_Fall1	Cin_S_Fall1_Delay	124.8p	
Cin_Sum_Fall1_Load	/A		
Cin_Sum_Fall1_Load	/B		
Cin_Sum_Fall1_Load	/C_in		
Cin_Sum_Fall1_Load	/C_out		
Cin_Sum_Fall1_Load	/S		
Cin_Sum_Fall1_Load	Cin_S_Fall1_Load	3.885n	
Cin_Sum_Fall1_Load	Cin_S_Fall1_Dela...	2.043n	
Cin_Sum_Fall2	/A		
Cin_Sum_Fall2	/B		
Cin_Sum_Fall2	/C_in		
Cin_Sum_Fall2	/C_out		
Cin_Sum_Fall2	/S		
Cin_Sum_Fall2	Cin_S_Fall2	19.82p	
Cin_Sum_Fall2	Cin_S_Fall2_Delay	81.24p	
Cin_Sum_Fall2_Load	/A		
Cin_Sum_Fall2_Load	/B		
Cin_Sum_Fall2_Load	/C_in		
Cin_Sum_Fall2_Load	/C_out		

Outputs Setup | Results

Detail | Replace

Test	Output	Nominal	Spec
B_Sum_Fall_Load	B_S_Fall_Delay_...	2.076n	
Cin_Sum_Fall1	/A		
Cin_Sum_Fall1	/B		
Cin_Sum_Fall1	/C_in		
Cin_Sum_Fall1	/C_out		
Cin_Sum_Fall1	/S		
Cin_Sum_Fall1	Cin_S_Fall1	16.52p	
Cin_Sum_Fall1	Cin_S_Fall1_Delay	124.8p	
Cin_Sum_Fall1_Load	/A		
Cin_Sum_Fall1_Load	/B		
Cin_Sum_Fall1_Load	/C_in		
Cin_Sum_Fall1_Load	/C_out		
Cin_Sum_Fall1_Load	/S		
Cin_Sum_Fall1_Load	Cin_S_Fall1_Load	3.885n	
Cin_Sum_Fall1_Load	Cin_S_Fall1_Dela...	2.043n	
Cin_Sum_Fall2	/A		
Cin_Sum_Fall2	/B		
Cin_Sum_Fall2	/C_in		
Cin_Sum_Fall2	/C_out		
Cin_Sum_Fall2	/S		
Cin_Sum_Fall2	Cin_S_Fall2	19.82p	
Cin_Sum_Fall2	Cin_S_Fall2_Delay	81.24p	
Cin_Sum_Fall2_Load	/A		
Cin_Sum_Fall2_Load	/B		
Cin_Sum_Fall2_Load	/C_in		
Cin_Sum_Fall2_Load	/C_out		
Cin_Sum_Fall2_Load	/S		
Cin_Sum_Fall2_Load	Cin_S_Fall2_Load	3.908n	
Cin_Sum_Fall2_Load	Cin_S_Fall2_Dela...	2.015n	

Interactive.32

Figure 10: ADE XL Pre-Extraction Simulation Summary

Outputs Setup | Results

Detail | Replace

Test	Output	Nominal	Spec
A_Carry_Rise	/A		
A_Carry_Rise	/B		
A_Carry_Rise	/C_in		
A_Carry_Rise	/C_out		
A_Carry_Rise	/S		
A_Carry_Rise	A_Cout_Rise	32.63p	
A_Carry_Rise	A_Cout_Rise_Del...	133.9p	
A_Carry_Rise_Load	/A		
A_Carry_Rise_Load	/B		
A_Carry_Rise_Load	/C_in		
A_Carry_Rise_Load	/C_out		
A_Carry_Rise_Load	/S		
A_Carry_Rise_Load	A_Cout_Rise_Load	2.795n	
A_Carry_Rise_Load	A_Cout_Rise_Del...	1.511n	
B_Carry_Rise	/A		
B_Carry_Rise	/B		
B_Carry_Rise	/C_in		
B_Carry_Rise	/C_out		
B_Carry_Rise	/S		
B_Carry_Rise	B_Cout_Rise	33.28p	
B_Carry_Rise	B_Cout_Rise_Del...	133.3p	
B_Carry_Rise_Load	/A		
B_Carry_Rise_Load	/B		
B_Carry_Rise_Load	/C_in		
B_Carry_Rise_Load	/C_out		
B_Carry_Rise_Load	/S		
B_Carry_Rise_Load	B_Cout_Rise_Load	2.777n	
B_Carry_Rise_Load	B_Cout_Rise_Del...	1.508n	
Cin_Carry_Rise1	/A		
Cin_Carry_Rise1	/B		

Interactive.38

Outputs Setup | Results

Detail | Replace

Test	Output	Nominal	Spec
B_Carry_Rise_Load	B_Cout_Rise_Load	2.777n	
B_Carry_Rise_Load	B_Cout_Rise_Del...	1.508n	
Cin_Carry_Rise1	/A		
Cin_Carry_Rise1	/B		
Cin_Carry_Rise1	/C_in		
Cin_Carry_Rise1	/C_out		
Cin_Carry_Rise1	/S		
Cin_Carry_Rise1	Cin_Cout_Rise	33.11p	
Cin_Carry_Rise1	Cin_Cout_Rise_...	112.5p	
Cin_Carry_Rise1_Load	/A		
Cin_Carry_Rise1_Load	/B		
Cin_Carry_Rise1_Load	/C_in		
Cin_Carry_Rise1_Load	/C_out		
Cin_Carry_Rise1_Load	/S		
Cin_Carry_Rise1_Load	Cin_Cout_Rise1_...	2.794n	
Cin_Carry_Rise1_Load	Cin_Cout_Rise1_...	1.488n	
Cin_Carry_Rise2	/A		
Cin_Carry_Rise2	/B		
Cin_Carry_Rise2	/C_in		
Cin_Carry_Rise2	/C_out		
Cin_Carry_Rise2	/S		
Cin_Carry_Rise2	Cin_Cout_Rise2	31.08p	
Cin_Carry_Rise2	Cin_Cout_Rise_...	119.1p	
Cin_Carry_Rise2_Load	/A		
Cin_Carry_Rise2_Load	/B		
Cin_Carry_Rise2_Load	/C_in		
Cin_Carry_Rise2_Load	/C_out		
Cin_Carry_Rise2_Load	/S		
Cin_Carry_Rise2_Load	Cin_Cout_Rise2_...	2.773n	
Cin_Carry_Rise2_Load	Cin_Cout_Rise2_...	1.49n	
A_Carry_Fall	/A		

Interactive.38

Outputs Setup | Results

Detail | Replace

Test	Output	Nominal	Spec	W
A_Carry_Fall	/A			
A_Carry_Fall	/B			
A_Carry_Fall	/C_in			
A_Carry_Fall	/C_out			
A_Carry_Fall	/S			
A_Carry_Fall	A_Cout_Fall	33.65p		
A_Carry_Fall	A_Cout_Fall_Delay	120.7p		
A_Carry_Fall_Load	/A			
A_Carry_Fall_Load	/B			
A_Carry_Fall_Load	/C_in			
A_Carry_Fall_Load	/C_out			
A_Carry_Fall_Load	/S			
A_Carry_Fall_Load	A_Cout_Fall_Load	3.825n		
A_Carry_Fall_Load	A_Cout_Fall_Del...	2.018n		
B_Carry_Fall	/A			
B_Carry_Fall	/B			
B_Carry_Fall	/C_in			
B_Carry_Fall	/C_out			
B_Carry_Fall	/S			
B_Carry_Fall	B_Cout_Fall	33.83p		
B_Carry_Fall	B_Cout_Fall_Delay	125.1p		
B_Carry_Fall_Load	/A			
B_Carry_Fall_Load	/B			
B_Carry_Fall_Load	/C_in			
B_Carry_Fall_Load	/C_out			
B_Carry_Fall_Load	/S			
B_Carry_Fall_Load	B_Cout_Fall_Load	33.83p		
B_Carry_Fall_Load	B_Cout_Fall_Del...	125.1p		
Cin_Carry_Fall1	/A			
Cin_Carry_Fall1	/B			
Cin_Carry_Fall1	/C_in			

Interactive.38

Outputs Setup | Results

Detail | Replace

Test	Output	Nominal	Spec
Cin_Carry_Fall1	/C_in		
Cin_Carry_Fall1	/C_out		
Cin_Carry_Fall1	/S		
Cin_Carry_Fall1	Cin_Cout_Fall1	39.48p	
Cin_Carry_Fall1	Cin_Cout_Fall1_...	115.4p	
Cin_Carry_Fall1_Load	/A		
Cin_Carry_Fall1_Load	/B		
Cin_Carry_Fall1_Load	/C_in		
Cin_Carry_Fall1_Load	/C_out		
Cin_Carry_Fall1_Load	/S		
Cin_Carry_Fall1_Load	CIn_Cout_Fall1_...	3.829n	
Cin_Carry_Fall1_Load	Cin_Cout_Fall1_...	2.017n	
Cin_Carry_Fall2	/A		
Cin_Carry_Fall2	/B		
Cin_Carry_Fall2	/C_in		
Cin_Carry_Fall2	/C_out		
Cin_Carry_Fall2	/S		
Cin_Carry_Fall2	Cin_Cout_Fall2	33.81p	
Cin_Carry_Fall2	Cin_Cout_Fall2_...	116.6p	
Cin_Carry_Fall2_Load	/A		
Cin_Carry_Fall2_Load	/B		
Cin_Carry_Fall2_Load	/C_in		
Cin_Carry_Fall2_Load	/C_out		
Cin_Carry_Fall2_Load	/S		
Cin_Carry_Fall2_Load	CIn_Cout_Fall2_...	3.806n	
Cin_Carry_Fall2_Load	Cin_Cout_Fall2_...	2.014n	
A_Sum_Rise	/A		
A_Sum_Rise	/B		
A_Sum_Rise	/C_in		
A_Sum_Rise	/C_out		
A_Sum_Rise	/S		

Interactive.38

Outputs Setup | Results

Detail | Replace

Test	Output	Nominal	Spec
A_Sum_Rise	/S		
A_Sum_Rise	A_S_Rise	32.73p	
A_Sum_Rise	A_S_Rise_Delay	192.9p	
A_Sum_Rise_Load	/A		
A_Sum_Rise_Load	/B		
A_Sum_Rise_Load	/C_in		
A_Sum_Rise_Load	/C_out		
A_Sum_Rise_Load	/S		
A_Sum_Rise_Load	A_S_Rise_Load	2.806n	
A_Sum_Rise_Load	A_S_Rise_Delay_...	1.567n	
B_Sum_Rise	/A		
B_Sum_Rise	/B		
B_Sum_Rise	/C_in		
B_Sum_Rise	/C_out		
B_Sum_Rise	/S		
B_Sum_Rise	B_S_Rise	31.81p	
B_Sum_Rise	B_S_Rise_Delay	197.1p	
B_Sum_Rise_Load	/A		
B_Sum_Rise_Load	/B		
B_Sum_Rise_Load	/C_in		
B_Sum_Rise_Load	/C_out		
B_Sum_Rise_Load	/S		
B_Sum_Rise_Load	B_S_Rise	2.801n	
B_Sum_Rise_Load	B_S_Rise_Delay	1.568n	
Cin_Sum_Rise1	/A		
Cin_Sum_Rise1	/B		
Cin_Sum_Rise1	/C_in		
Cin_Sum_Rise1	/C_out		
Cin_Sum_Rise1	/S		
Cin_Sum_Rise1	Cin_S_Rise1	29.76p	
Cin_Sum_Rise1	CIn_S_Rise1_Del...	208.6p	

Interactive.38

Outputs Setup | Results

Detail | Replace

Test	Output	Nominal	Spec
Cin_Sum_Rise1	/C_out		
Cin_Sum_Rise1	/S		
Cin_Sum_Rise1	Cin_S_Rise1	29.76p	
Cin_Sum_Rise1	CIn_S_Rise1_Del...	208.6p	
Cin_Sum_Rise1_Load	/A		
Cin_Sum_Rise1_Load	/B		
Cin_Sum_Rise1_Load	/C_in		
Cin_Sum_Rise1_Load	/C_out		
Cin_Sum_Rise1_Load	/S		
Cin_Sum_Rise1_Load	Cin_S_Rise1_Load	2.797n	
Cin_Sum_Rise1_Load	CIn_S_Rise1_Del...	1.577n	
Cin_Sum_Rise2	/A		
Cin_Sum_Rise2	/B		
Cin_Sum_Rise2	/C_in		
Cin_Sum_Rise2	/C_out		
Cin_Sum_Rise2	/S		
Cin_Sum_Rise2	Cin_S_Rise1	29.59p	
Cin_Sum_Rise2	CIn_S_Rise1_Del...	128.1p	
Cin_Sum_Rise2_Load	/A		
Cin_Sum_Rise2_Load	/B		
Cin_Sum_Rise2_Load	/C_in		
Cin_Sum_Rise2_Load	/C_out		
Cin_Sum_Rise2_Load	/S		
Cin_Sum_Rise2_Load	Cin_S_Rise2_Load	2.814n	
Cin_Sum_Rise2_Load	CIn_S_Rise2_Del...	1.502n	
A_Sum_Fall	/A		
A_Sum_Fall	/B		
A_Sum_Fall	/C_in		
A_Sum_Fall	/C_out		
A_Sum_Fall	/S		
A_Sum_Fall	A_S_Fall	43.86p	

Outputs Setup | Results

Detail | Replace

Test	Output	Nominal	Spec	Weight
Cin_Sum_Rise2_Load	CIn_S_Rise2_Del...	1.502n		
A_Sum_Fall	/A			
A_Sum_Fall	/B			
A_Sum_Fall	/C_in			
A_Sum_Fall	/C_out			
A_Sum_Fall	/S			
A_Sum_Fall	A_S_Fall	43.86p		
A_Sum_Fall	A_S_Fall_Delay	219.7p		
A_Sum_Fall_Load	/A			
A_Sum_Fall_Load	/B			
A_Sum_Fall_Load	/C_in			
A_Sum_Fall_Load	/C_out			
A_Sum_Fall_Load	/S			
A_Sum_Fall_Load	A_S_Fall_Load	3.803n		
A_Sum_Fall_Load	A_S_Fall_Delay_L...	2.123n		
B_Sum_Fall	/A			
B_Sum_Fall	/B			
B_Sum_Fall	/C_in			
B_Sum_Fall	/C_out			
B_Sum_Fall	/S			
B_Sum_Fall	B_S_Fall	41.62p		
B_Sum_Fall	B_S_Fall_Delay	218.9p		
B_Sum_Fall_Load	/A			
B_Sum_Fall_Load	/B			
B_Sum_Fall_Load	/C_in			
B_Sum_Fall_Load	/C_out			
B_Sum_Fall_Load	/S			
B_Sum_Fall_Load	B_S_Fall_Load	3.81n		
B_Sum_Fall_Load	B_S_Fall_Delay_...	2.118n		
Cin_Sum_Fall1	/A			
Cin_Sum_Fall1	/B			

Outputs Setup | Results

Detail | Replace

Test	Output	Nominal	Spec
B_Sum_Fall_Load	/S		
B_Sum_Fall_Load	B_S_Fall_Load	3.81n	
B_Sum_Fall_Load	B_S_Fall_Delay_...	2.118n	
Cin_Sum_Fall1	/A		
Cin_Sum_Fall1	/B		
Cin_Sum_Fall1	/C_in		
Cin_Sum_Fall1	/C_out		
Cin_Sum_Fall1	/S		
Cin_Sum_Fall1	Cin_S_Fall1	31.51p	
Cin_Sum_Fall1	Cin_S_Fall1_Delay	200.4p	
Cin_Sum_Fall1_Load	/A		
Cin_Sum_Fall1_Load	/B		
Cin_Sum_Fall1_Load	/C_in		
Cin_Sum_Fall1_Load	/C_out		
Cin_Sum_Fall1_Load	/S		
Cin_Sum_Fall1_Load	Cin_S_Fall1_Load	3.801n	
Cin_Sum_Fall1_Load	Cin_S_Fall1_Dela...	2.077n	
Cin_Sum_Fall2	/A		
Cin_Sum_Fall2	/B		
Cin_Sum_Fall2	/C_in		
Cin_Sum_Fall2	/C_out		
Cin_Sum_Fall2	/S		
Cin_Sum_Fall2	Cin_S_Fall2	36.51p	
Cin_Sum_Fall2	Cin_S_Fall2_Delay	120.2p	
Cin_Sum_Fall2_Load	/A		
Cin_Sum_Fall2_Load	/B		
Cin_Sum_Fall2_Load	/C_in		
Cin_Sum_Fall2_Load	/C_out		
Cin_Sum_Fall2_Load	/S		
Cin_Sum_Fall2_Load	Cin_S_Fall2_Load	3.823n	
Cin_Sum_Fall2_Load	Cin_S_Fall2_Dela...	2.015n	

Figure 11: ADE XL Post-Extraction Simulation Summary

3.3 Design Rule Check (DRC) and Layout Versus Schematic (LVS)

Before extraction, the layout was verified using the DRC and LVS tools in Cadence. The DRC check confirmed that the layout adhered to all applicable design rules. Initially, the LVS check reported some errors and failed to verify the functional equivalence between the schematic and the layout. However, after debugging and making the necessary corrections, the LVS check was successfully completed, confirming that the layout matches the schematic in terms of connectivity and device parameters. Figures 12 and 13 show the successful DRC and LVS results, respectively.

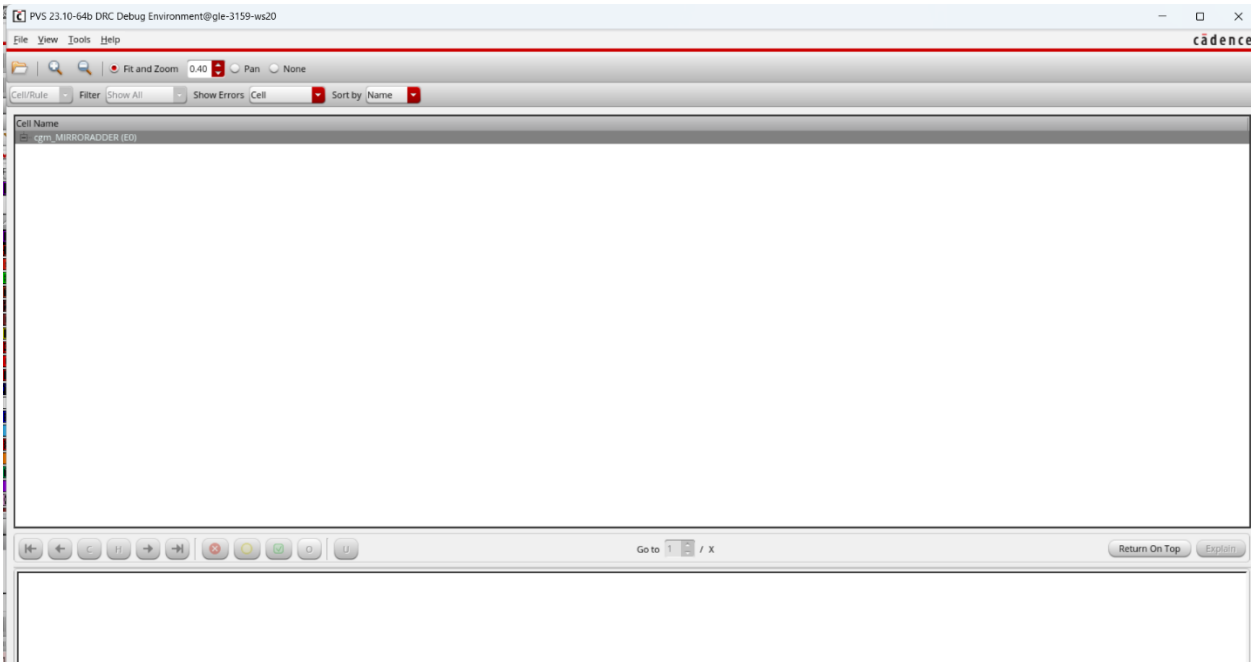

Figure 12: DRC Verification - No Errors Found

Figure 13: LVS Check Result

3.4 Extracted Parasitic Layout

After resolving the LVS issues, QRC extraction was performed to generate a parasitic-aware view of the mirror adder layout, as shown in Figure 14. The extracted netlist revealed a total of 44 transistors, including both NMOS and PMOS devices. Additionally, 108 capacitors and approximately 130 resistors were identified, modeling parasitic effects introduced by diffusion regions, metal routing, and interconnect overlaps. These extracted components reflect the physical non-idealities of the layout and were included in post-layout simulations to provide more accurate timing and performance analysis.

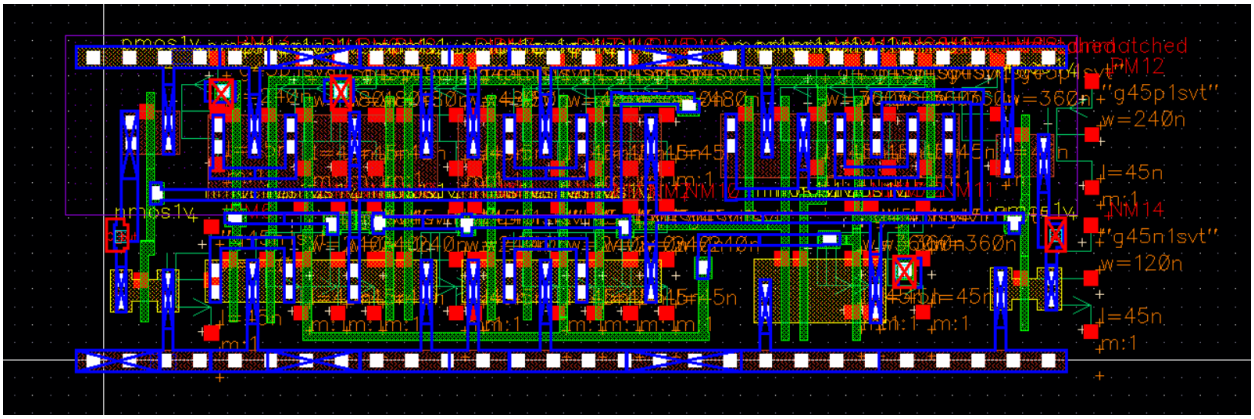

Figure 14: Extracted Layout with Parasitic Elements

3.5 Summary of Simulation Results

To quantify the design performance, rise and fall times and propagation delays were collected for both the Sum and Carry-out outputs. These results are summarized in Tables 2 and 3 for Pre-layout and Table 5 and 6 for post-layout.

Table 2: Sum Results for Pre-layout

	Vdd (V)	Temp (C)	Load (fF)	RiseTime (s)	FallTime (s)	$T_{P,HL}$ (s)	$T_{P,LH}$ (s)
Worst Case	1	125	0	19.63 p	25.24 p	142.8 p	119.3 p
	1	125	120	3.803 n	3.8 n	2.136 n	2.025 n

Table 3: Carry Out Results for Pre-layout

	Vdd (V)	Temp (C)	Load (fF)	RiseTime (s)	FallTime (s)	$T_{P,HL}$ (s)	$T_{P,LH}$ (s)
Worst Case	1	125	0	17.94 p	16.26 p	74.17 p	94.94 p
	1	125	120	2.817 n	3.808 n	2.031 n	2.012 n

Table 4: Sum Results for Post-layout

	Vdd (V)	Temp (C)	Load (fF)	RiseTime (s)	FallTime (s)	$T_{P,HL}$ (s)	$T_{P,LH}$ (s)
Worst Case	1	125	0	33.56 p	48.69 p	222.2 p	144 p
	1	125	120	3.803 n	3.8 n	2.136 n	2.025 n

Table 5: Carry Out Results for Post-layout

	Vdd (V)	Temp (C)	Load (fF)	RiseTime (s)	FallTime (s)	$T_{P,HL}$ (s)	$T_{P,LH}$ (s)
Worst Case	1	125	0	33.06 p	39.53 p	115.3 p	112.5 p
	1	125	120	2.817 n	3.808 n	2.031 n	2.012 n

The maximum input frequency, $\boldsymbol{F_{input,max}}$ represents the highest frequency at which the adder can reliably process input transitions. It is given by the equation:

$$\boldsymbol{F_{input,max} = 1/(t_{rise} + t_{fall})}$$

Similarly, the maximum throughput frequency, $\boldsymbol{F_{throughput,max}}$ is determined by the total propagation delay and is given by:

$$\boldsymbol{F_{throughput,max} = 1/(T_{P,HL} + T_{P,LH})}$$

Using the extracted timing values from worst-case conditions, the maximum operating frequencies were computed. The results are summarized in the Table 6 below.

Table 6: Overall Results for Pre-layout

Output	Load (fF)	$F_{input,max}$	$F_{throughput,max}$
Sum	0	22.29 GHz	3.815 GHz
Sum	120	131.5 MHz	240.3 MHz
Cout	0	29.24 GHz	5.912 GHz
Cout	120	150.96 MHz	247.4 MHz

Table 7: Overall Results for Post-layout

Output	Load (fF)	$F_{input,max}$	$F_{throughput,max}$
Sum	0	12.16 GHz	2.73 GHz
Sum	120	131.5 MHz	240.3 MHz
Cout	0	13.78 GHz	4.39 GHz
Cout	120	150.96 MHz	247.4 MHz

The calculations for the percentage decrease in maximum operating frequency and throughput are as follows:

$$Percentage\ decrease = \left((F_{unloaded} - F_{loaded})/F_{unloaded}\right) \times 100$$

For Sum Output:

$\boldsymbol{F_{input,max}}\ (unloaded)\ =\ 22.29\ GHz$

$\boldsymbol{F_{input,max}}(loaded)\ =\ 131.5\ MHz\ =\ 0.1315\ GHz$

$\boldsymbol{F_{throughput,max}}\ (unloaded)\ =\ 3.815\ GHz$

$\boldsymbol{F_{throughput,max}}\ (loaded)\ =\ 240.3\ MHz\ =\ 0.2403\ GHz$

$\boldsymbol{F_{input,max}}$ **Decrease (Sum):**

$= ((22.29\ -\ 0.1315)\ /\ 22.29)\ \times\ 100$
$= (22.1585\ /\ 22.29) \times\ 100\ \approx\ 99.41\%$

$\boldsymbol{F_{throughput,max}}$ **Decrease (Sum):**

$= ((3.815\ -\ 0.2403)\ /\ 3.815)\ \times\ 100$
$= (3.5747\ /\ 3.815)\ \times\ 100\ \approx\ 93.70\%$

For Cout Output:

$\boldsymbol{F_{input,max}}\ (unloaded)\ =\ 29.24\ GHz$

$\boldsymbol{F_{input,max}}\ (loaded)\ =\ 150.96\ MHz\ =\ 0.15096\ GHz$

$\boldsymbol{F_{throughput,max}}\ (unloaded)\ =\ 5.912\ GHz$

$\boldsymbol{F_{throughput,max}}\ (loaded)\ =\ 247.4\ MHz\ =\ 0.2474\ GHz$

$\boldsymbol{F_{input,max}}$ **Decrease (Cout):**

$= ((29.24\ -\ 0.15096)\ /\ 29.24)\ \times\ 100$
$= (29.08904\ /\ 29.24)\ \times\ 100\ \approx\ 99.48\%$

$F_{throughput,max}$ **Decrease (Cout):**

$$= ((5.912 - 0.2474) / 5.912) \times 100$$
$$= (5.6646 / 5.912) \times 100 \approx 95.81\%$$

3.7 Layout Dimensions

The layout of the mirror adder has a cell width of 5.6 µm and a height of 1.71 µm. The total area is calculated as:

Area = Width × Height
Area = 5.6 µm × 1.71 µm = 9.576 µm²

4. Conclusion

The design, layout, and simulation of the mirror adder were successfully completed. Pre-layout and post-layout simulations confirmed functional correctness and provided insight into delay and performance metrics. The layout passed both DRC and LVS checks, and QRC extraction enabled accurate modeling of parasitic effects. While post-layout results showed increased delay due to parasitics, the circuit remained within acceptable limits. The project demonstrated the importance of careful layout practices and parasitic-aware verification in digital IC design.

5. Signoff Sheet

5 Signoff Sheet

Table 4. Design of a Mirror Adder

Students Name: Gloria Mbaka Section:

Part 1 Demo	Point Value	Points Earned	Date
Schematic Sizing Check	5		
Schematic CIW Check	10		
Pre-layout Test Simulation Demo	20	20	JF 3/14
Part 2 Pre-Lab	**Point Value**	**Points Earned**	**Date**
Schematic with Folding Transistors	5	5	TB 3/8
Mirror Adder Stick Diagram	5		
Part 2 Demo	**Point Value**	**Points Earned**	**Date**
DRC Check	15		
LVS Check	15		
Parasitic RC RCX	10		
Post-layout Test Simulation Demo	15		
Extra Credit 4-bit reqs + report	+10 overall		
Total Points	100		